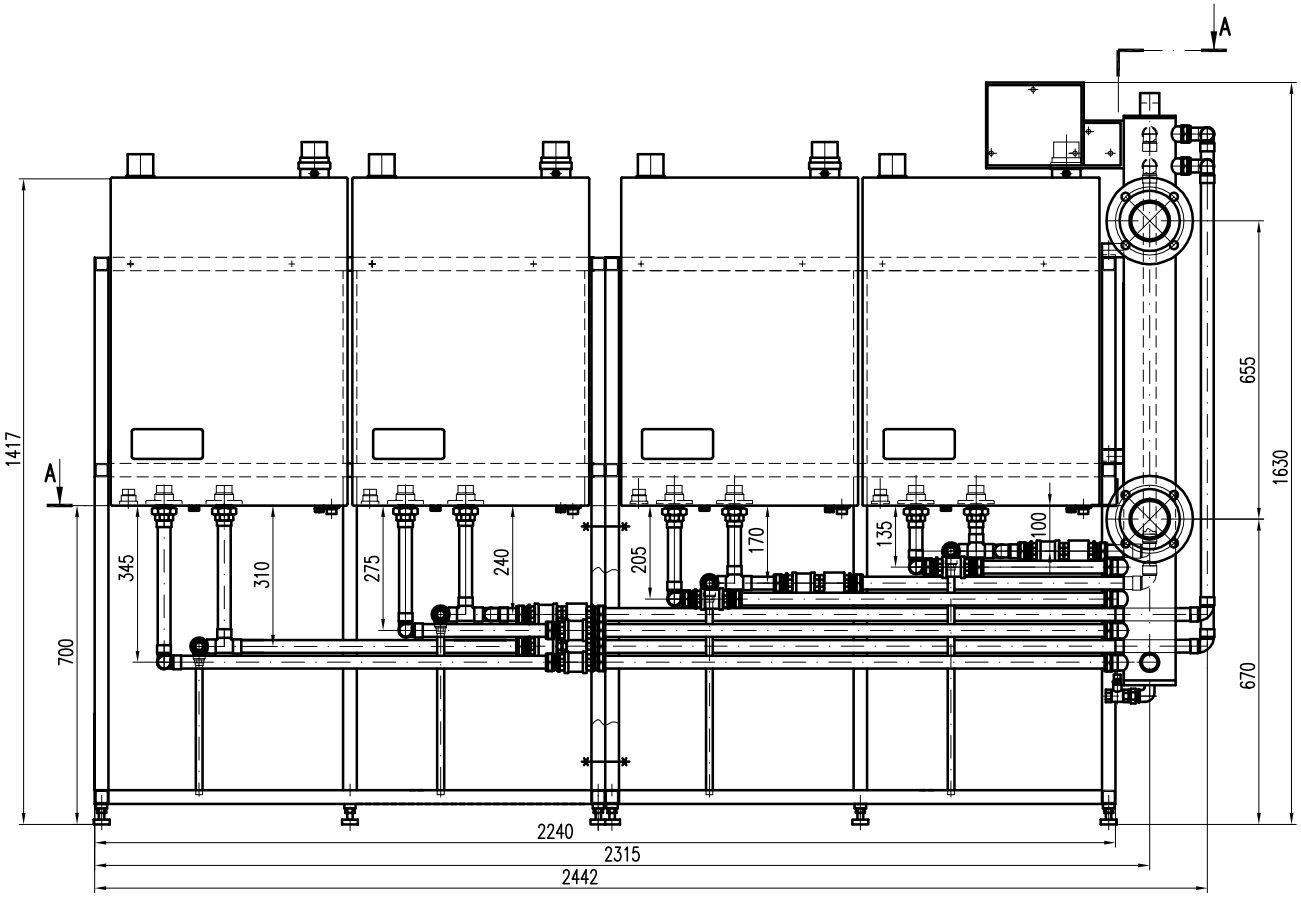

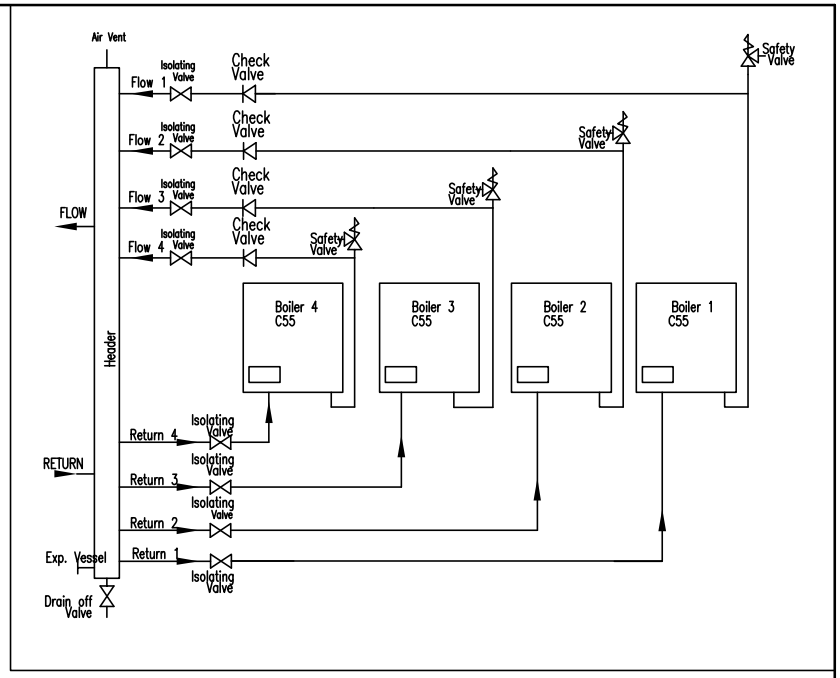

A – A

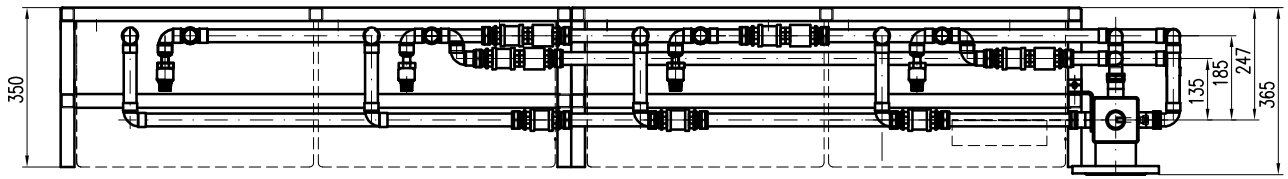

4 x C55 (2+2)
CH HEADER

4MC55+RH HDR LINE (2–2)

KESTON

4MC55

Date: 24.05.2006

4 x C55 FLOOR RIG